THIS DRAWING IS UNPUBLISHED. RELEASED FOR PUBLICATION -,- .
© COPYRIGHT - BY - ALL RIGHTS RESERVED.

REVISIONS					
P	LTR	DESCRIPTION	DATE	DRN	APVD
	E3	REVISED PER ECO-18-001286	25JAN2018	RS	KR

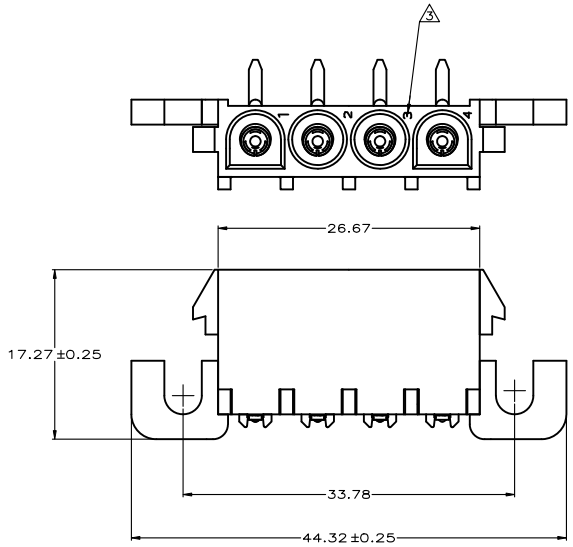

1 PARTS COMPLY WITH AMP SOLDERABILITY SPECIFICATION 109-11-5.

2 0.00076 GOLD OVER 0.00127 MIN NICKEL WITH MATTE TIN LEAD ON SOLDER TAIL.

3 CIRCUIT IDENTIFICATION CHARACTERS ARE ADJACENT TO THE INDICATED CAVITIES,BUT LOCATION AND ORIENTATION MAY DIFFER FROM PRINT.

4 0.00076 GOLD OVER 0.00127 MIN NICKEL WITH MATTE TIN ON SOLDER TAIL.

5 SUPERSEDED BY 3-643230-0

6 DIMENSIONS SHOWN REPRESENT PRODUCT IN DRY CONDITION. ADDITIONAL 2% GROWTH DUE TO END USE LOCATION MOISTURE ABSORPTION MAY OCCUR AND SHOULD BE ACOUNTED FOR

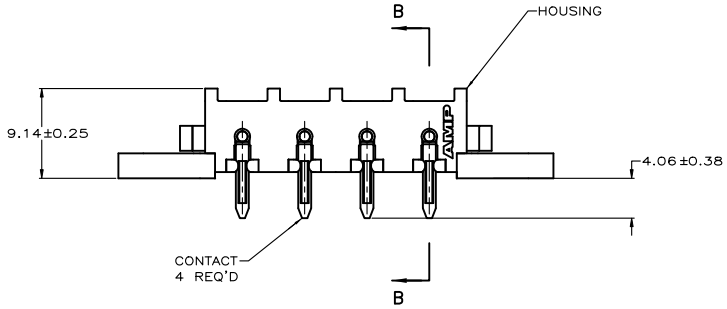

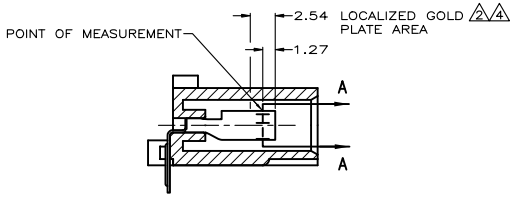

SECTION B-B

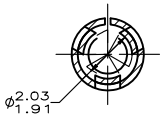

SECTION A-A
SCALE 10:1

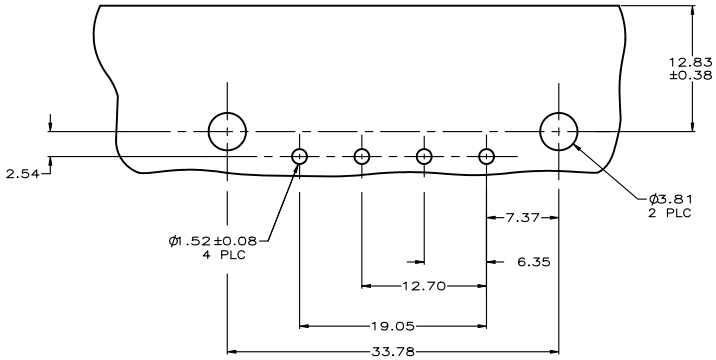

RECOMMENDED MOUNTING HOLE PATTERN
FOR 1.57 THICK P.C. BOARD

3.81	.150		
2.54	.100		
2.03	.080	44.32	1.745
1.91	.075	33.78	1.330
1.57	.062	26.67	1.050
1.52	.060	19.05	.750
1.27	.050	17.27	.680
0.38	.015	12.83	.505
0.25	.010	12.70	.500
0.13	.005	9.14	.360
0.08	.003	7.37	.290
0.00127	.000050	6.35	.250
0.00076	.000030	4.06	.160
MM	IN	MM	IN
CONVERSION TABLE			

	PH BRZ, 4	NYLON UL 94V-0	3-643230-0
5	PH BRZ, 2	NYLON UL 94V-0	643230-2
	PH BRZ,TIN	NYLON UL 94V-0	643230-1
	CONTACT	HOUSING	PART NUMBER

THIS DRAWING IS A CONTROLLED DOCUMENT.

DIMENSIONS: mm

TOLERANCES UNLESS OTHERWISE SPECIFIED:
0 PLC ± –
1 PLC ± –
2 PLC ± 0.13
3 PLC ± –
4 PLC ± –
ANGLES ± –

MATERIAL: SEE TABLE
FINISH: SEE TABLE

DRN K. WHITAKER 21APR2005
CHK S. RIDGILL 21APR2005
APVD S. RIDGILL 21APR2005
PRODUCT SPEC –
APPLICATION SPEC –
WEIGHT 0.000000
CUSTOMER DRAWING

TE Connectivity Ltd.

NAME: SOCKET HEADER ASSEMBLY, RIGHT ANGLE MOUNT,4 POSITION, UNIVERSAL MATE-N-LOK(TM)

SIZE A1 | CAGE CODE 00779 | DRAWING NO C-643230 | RESTRICTED TO –

SCALE 4:1 | SHEET 1 OF 1 | REV E3

4805 (1/15)